MUEO

# MOI UNIVERSITY

OFFICE OF THE DEPUTY VICE CHANCELLOR
(ACADEMICS, RESEARCH & EXTENSION)

# UNIVERSITY EXAMINATIONS
# 2017/2018 ACADEMIC YEAR

THIRD YEAR FIRST SEMESTER EXAMINATION
**FOR THE DEGREE OF**

## BACHELOR OF ENGINEERING
## IN
## MANUFACTURING INDUSTRIAL AND TEXTILE ENGINEERING, CHEMICAL AND PROCESSING ENGINEERING AND MECHANICAL AND PRODUCTION ENGINEERING

**COURSE CODE:** ECE 301

**COURSE TITLE:** BASIC ELECTRONICS

**DATE:** 2ND MARCH, 2018 **TIME:** 9.00 A.M. – 12.00 NOON

## INSTRUCTION TO CANDIDATES

- Answer any five (5) of seven (7) questions

THIS PAPER CONSISTS OF (8) PRINTED PAGES

PLEASE TURN OVER

Scanned by CamScanner

**INSTRUCTIONS:**

**ANSWER ANY 5 OF 7 QUESTIONS**

**ALL QUESTIONS CARRY EQUAL MARKS**

**CONSTANTS**

$K = 1.38 \times 10^{-23}\ J\ K^{-1}$ $e = 1.6 \times 10^{-19}\ C$

**Standard Temperature = 0°C at STP**

## QUESTION ONE

a) Differentiate between Knee voltage and Breakdown voltage (1 mark)

b) Sketch a graph to show the differences between the two voltages above (2 marks)

c) Briefly describe the following materials using Energy band diagrams:

i.) Conductor (1 mark)
ii.) Insulator (1 mark)
iii.) Semiconductor (1 mark)

d) Explain 2 ways in which the semiconductor illustrated below can be doped to form extrinsic semiconductors with the aid of well labeled diagrams. (6 marks)

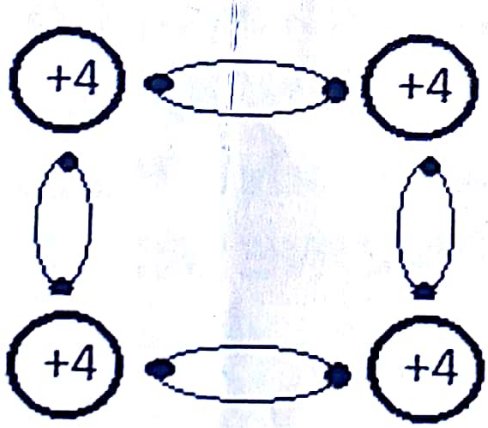


e) Two Germanium diodes are placed in series with a 2KΩ and 4KΩ resistor (placed in parallel to each other) in a circuit. If a 24V supply is also placed in series with the rest of the components, find the current through the diodes. (2 marks)



Scanned by CamScanner

## QUESTION TWO

a) Explain what happens to charge carriers during the reverse bias of a diode with the aid of a well labeled diagram. (3 marks)

b) Given that the surface leakage current in a reverse biased diode is 0.6856 μA. Determine the temperature required to make it conduct it given that the saturation current is 10 μA if the voltage across the junction is 0.002v (3 marks)

c) Calculate the diode's range of surface leakage current between the stated temperature and at standard temperature and pressure (2 marks)

d) In the figure below calculate the value of the voltage source required to conduct 5A through the 2Ω resistor given that the diodes are Germanium

(4 marks)

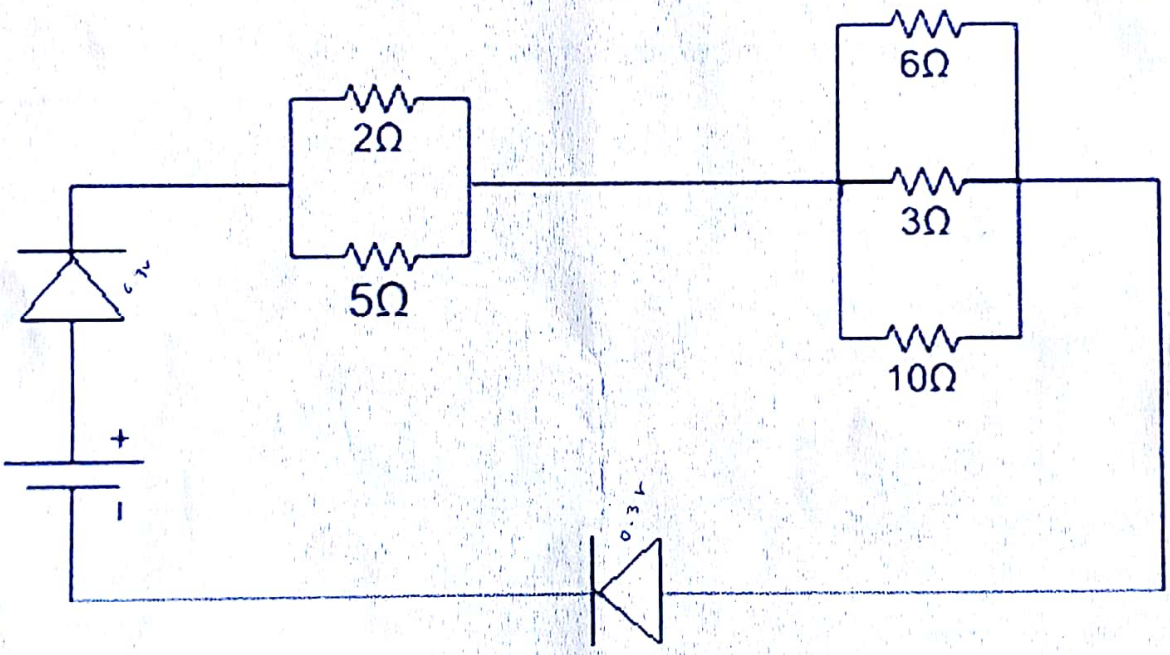


c) State 4 differences between the characteristics of Silicon and Germanium diodes (2 marks)



Scanned by CamScanner

## QUESTION THREE

a) Describe the action of a PNP transistor with the aid of a diagram (3 marks)

b) When the base is open and emitter is closed, a current flows in a transistor, when the emitter is open and the base closed, another current flows. State these two currents and show their relationship

(2 marks)

c) In the Silicon transistor circuit below, calculate the following:

i). Base current amplification factor (β) (1 mark)

ii). Current through the 10Ω resistor (2 marks)

iii). The ammeter reading 'A' below (1 mark)

iv). The value of $V_{CC}$ given that $V_{CE}$ = 15V (1 mark)

v). The value of the small current that flows in the transistor when the 2kΩ resistor is removed and circuit left open (assuming emitter current decreases by 4%) (3 marks)

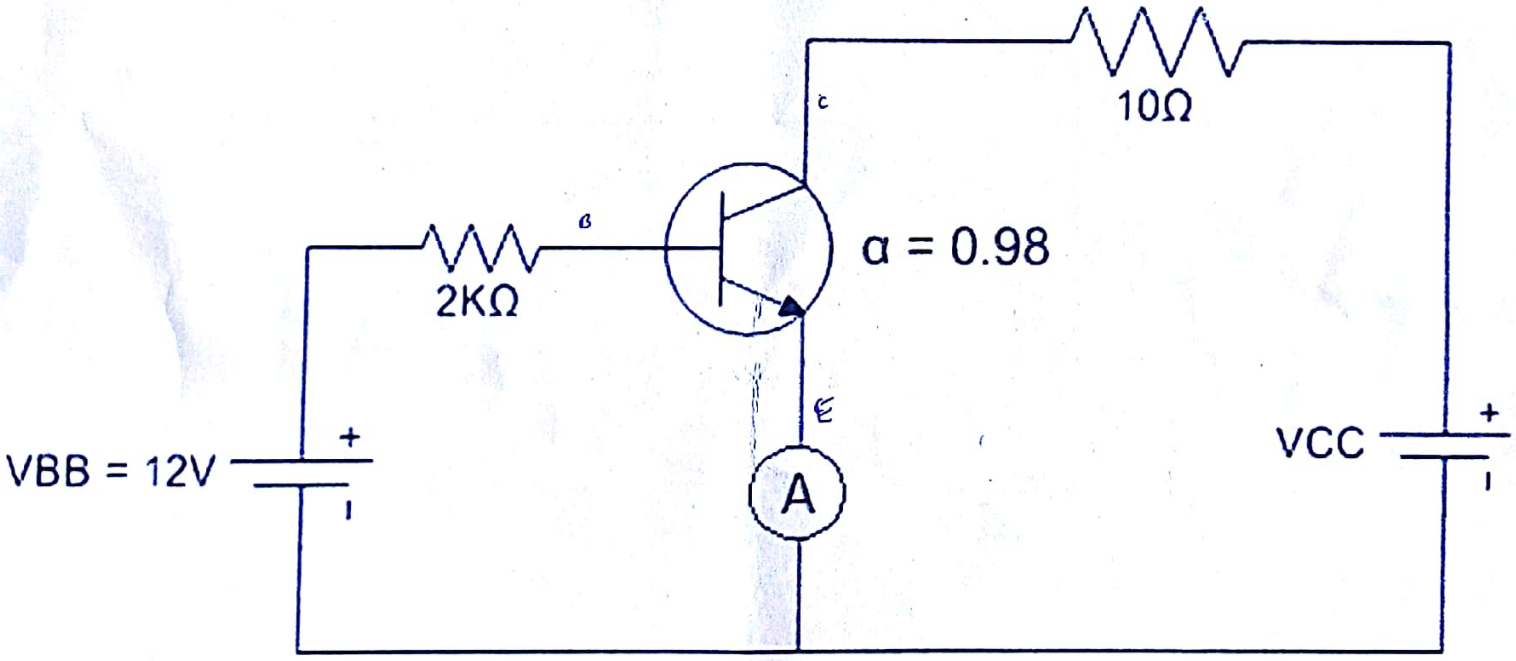


d) What is the Q-Point of a transistor (1 mark)



Scanned by CamScanner

## QUESTION FOUR

a) For a given transistor, derive the expression,

$$\beta = {}^{\alpha}/_{(1-\alpha)}$$ (3 Marks)

b) Draw the circuit diagram of an *integrating* op amp and derive the expression of the output voltage Vo. (3 Marks)

c) Given the values of the Capacitor = 8μF and the Resistor is 24MΩ, calculate the value of Vo for input voltage change of 6v in 10 seconds (1 Mark)

d) State six properties common to all operational amplifiers. (3 Marks)

e) In the circuit below, the values of the resistances are as follows: R1 = 15Ω, Rf = 20Ω.

i). Derive the expression of Vo (2 Marks)

ii). Calculate the value of Vin required to produce Vo = 70v (2 Marks)

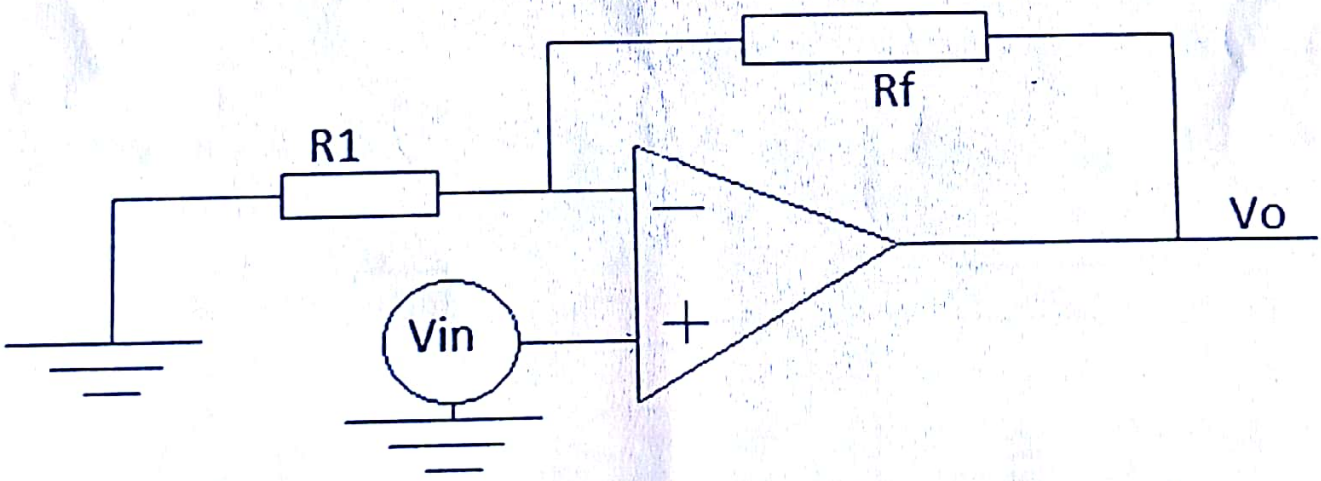




Scanned by CamScanner

## QUESTION FIVE

a) Explain the following terms as relates to transistors
   i.) Cut-off point (1 Mark)
   ii.) Saturation point (1 Mark)
   iii.) Active region (1 Mark)

b) With the aid of a well labeled circuit, derive the expression of the output voltage a summing op-amp with 5 input voltages (V1 to V5) whose resistances are (R1 to R5) and a feedback resistor Rf. (3 Marks)

c) Give the expression of the output voltage if all input resistors are equal (R) (1 Mark)

d) A given adding amplifier has the following input voltages with corresponding input resistances: V1 = 10V, R1 = 5Ω; V2 = 20V, R2 = 10Ω; V3 = 40V, R3 = XΩ. Determine the value of X required to produce an output voltage of -180V given the feedback resistor is 30Ω. (2 Marks)

e) What is the gain for each input of the above amplifier (2 Marks)

f) Calculate the output voltage of the op amp circuit below. (2 Marks)

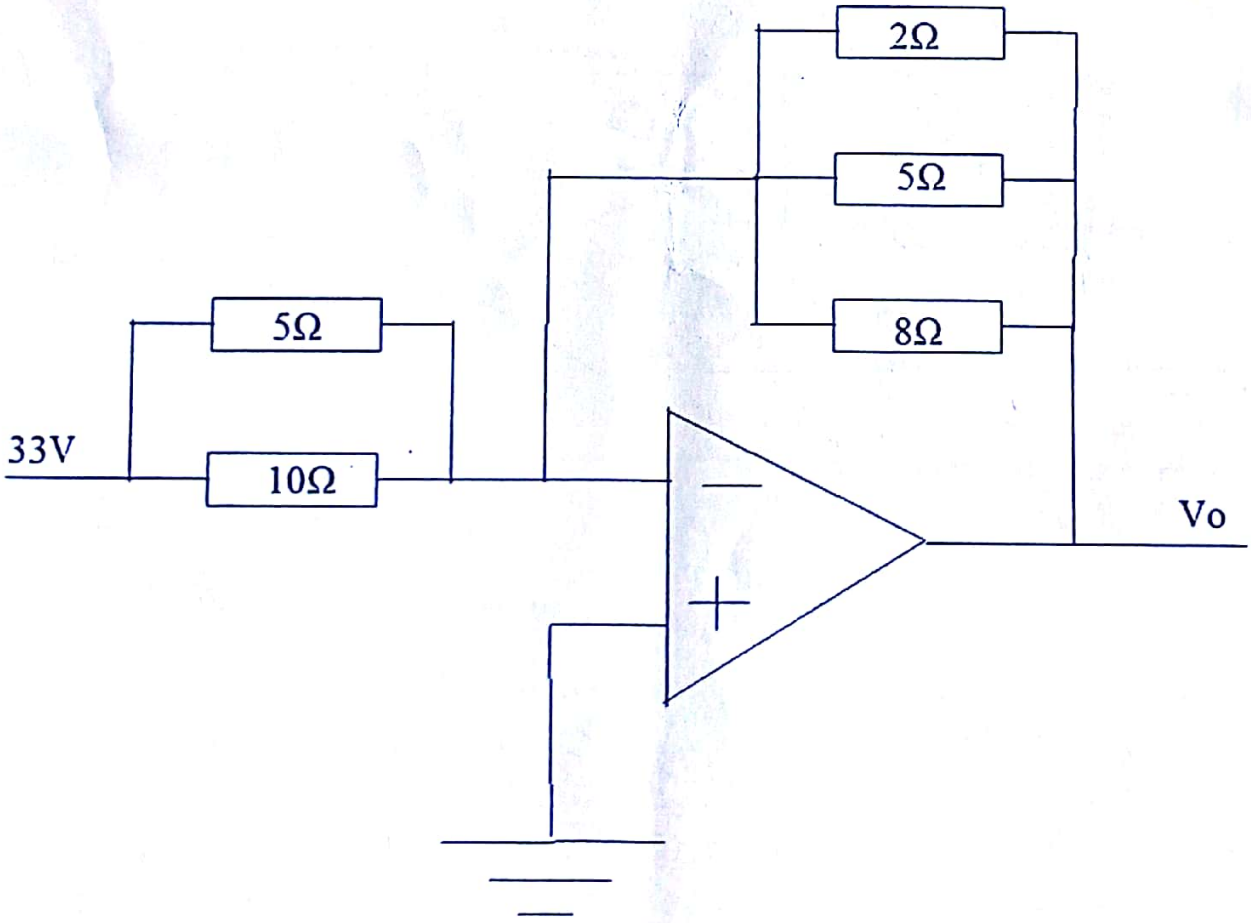


g) Calculate the gain of the above op-amp circuit (1 Mark)



Scanned by CamScanner

## QUESTION SIX

a) Define Common mode rejection ratio and give its expression (2 marks)

b) State 3 differences between TTL and CMOS logic families. (3 Marks)

c) Define the following terms:

i). Digital signal (0.5 Marks)

ii). Logic gate (0.5 Marks)

d) A given gate has the outputs as shown in the truth table below.

| INPUTS | | OUTPUT |
|---|---|---|
| A | B | 'Y' |
| 0 | 0 | 0 |
| 0 | 1 | 1 |
| 1 | 0 | 1 |
| 1 | 1 | 0 |

i). State its name and sketch its main schematic diagram (1 Mark)

ii). Sketch how it can be implemented using other gates apart from itself. (1 Mark)

iii). Give the expression of the output with reference to the inputs (1 Mark)

e) Derive the expression Q for the circuit below (3 Marks)

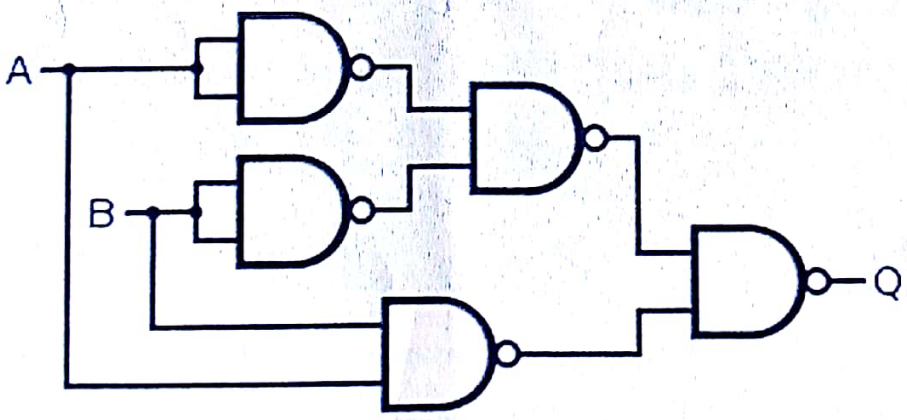


f) Draw the truth table for the above circuit. (1 Mark)

g) Name the logic gate that is represented by the above circuit (1 Mark)



Scanned by CamScanner

## QUESTION SEVEN

a) State the duality principle as used in Boolean algebra and give an example. (2 Marks)

b) Draw and explain the four modes of a J-K flip-flop and provide its truth table. (6 Marks)

c) Derive the expression of the output of the circuit 'x' below in standard Sum of Products form. (3 Marks)

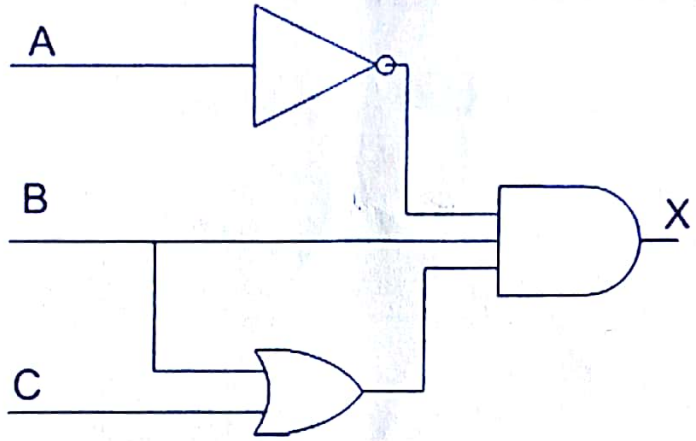


d) Simplify the expression. $\overline{A}\overline{B}(A+\overline{C})+\overline{A}(\overline{B}+\overline{C})+\overline{A}\overline{C}$ (3 Marks)

**[THE END]**



Scanned by CamScanner